#05 Item: Chest

PAPER D&D
patreon.com/paperDnD

Instructions:

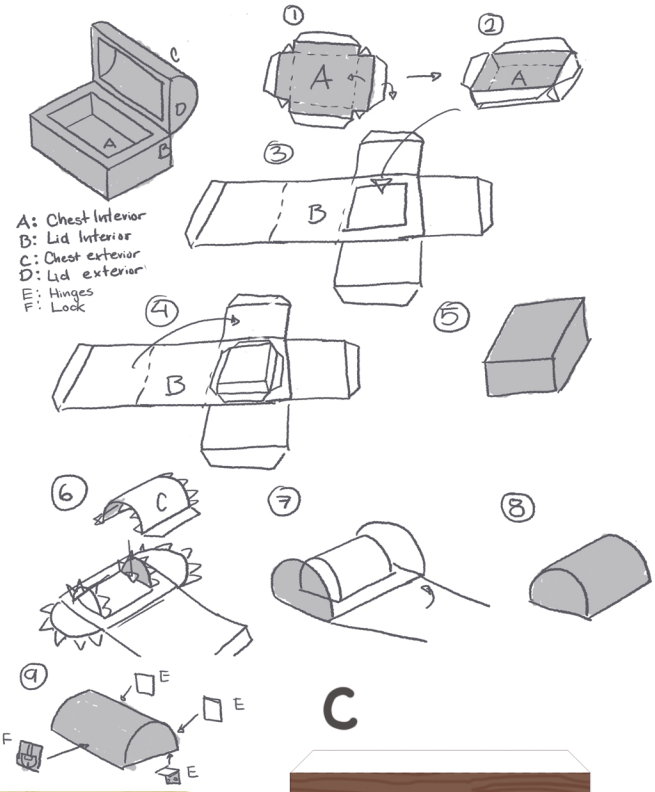

D

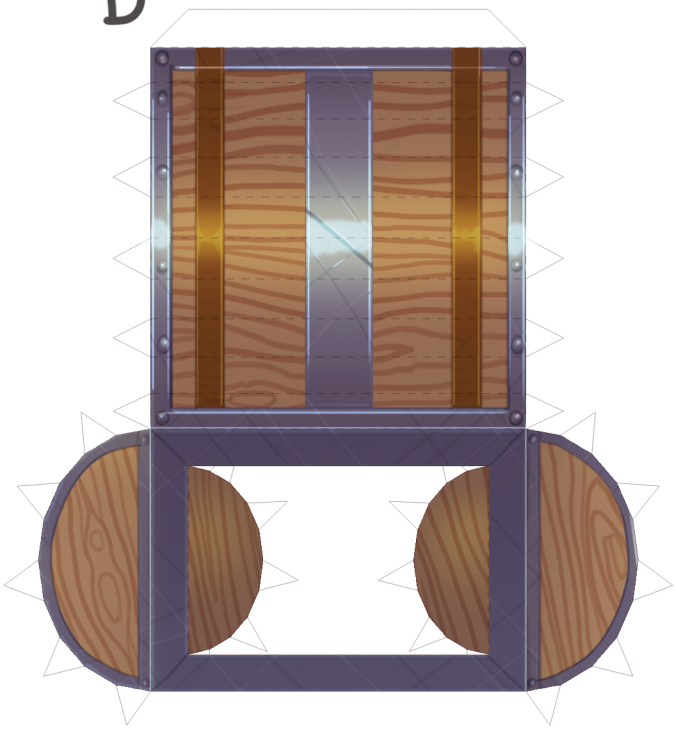

C

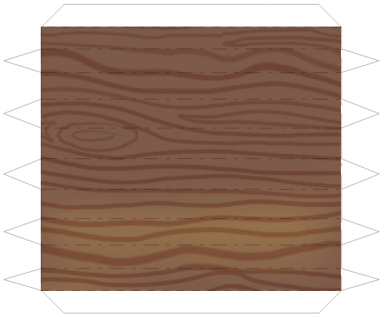

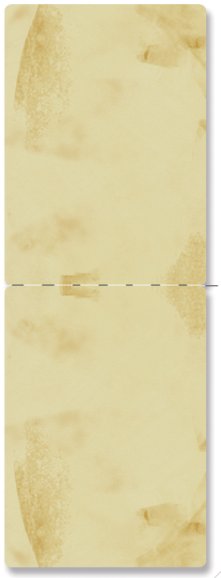

Fold and Paste

F E



A

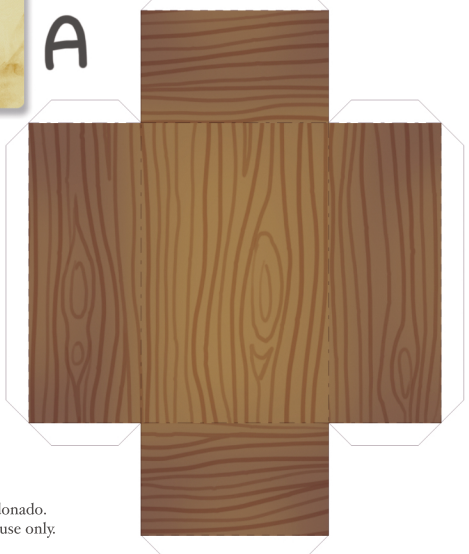

B

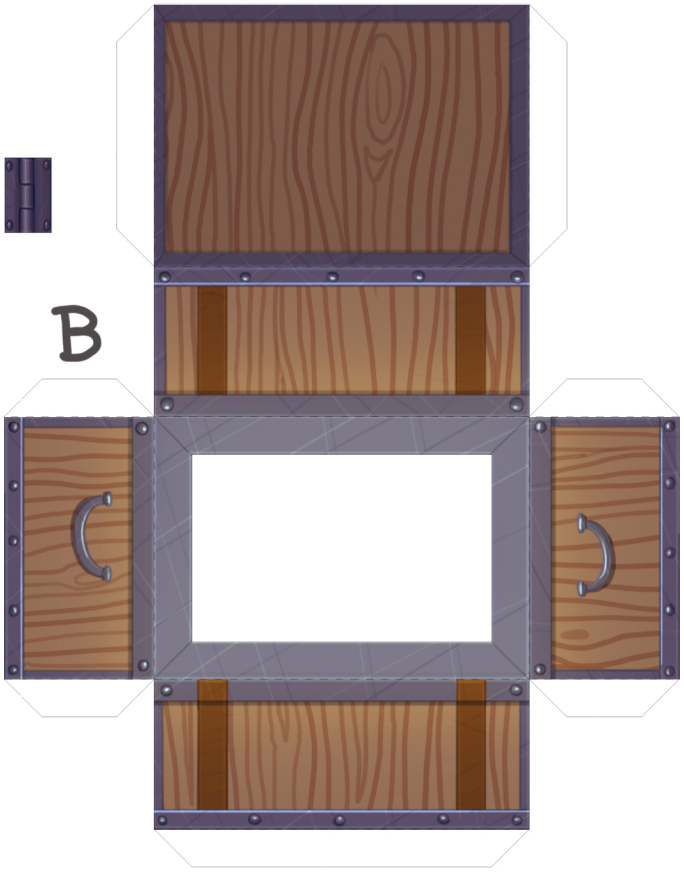

Item Card



Created by
Patricia Maldonado.
For Personal use only.

#05 Item: Chest

PAPER D&D
patreon.com/paperDnD

Instructions:

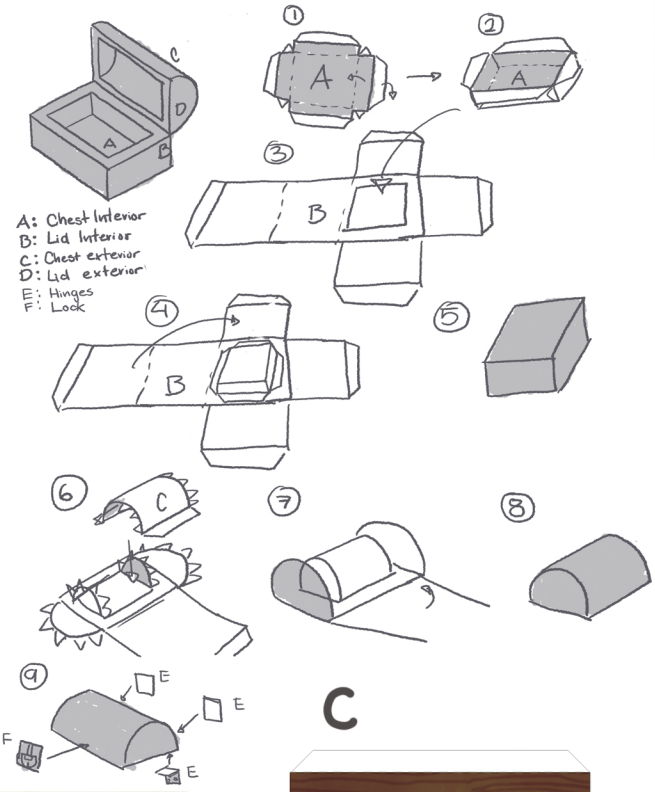

D

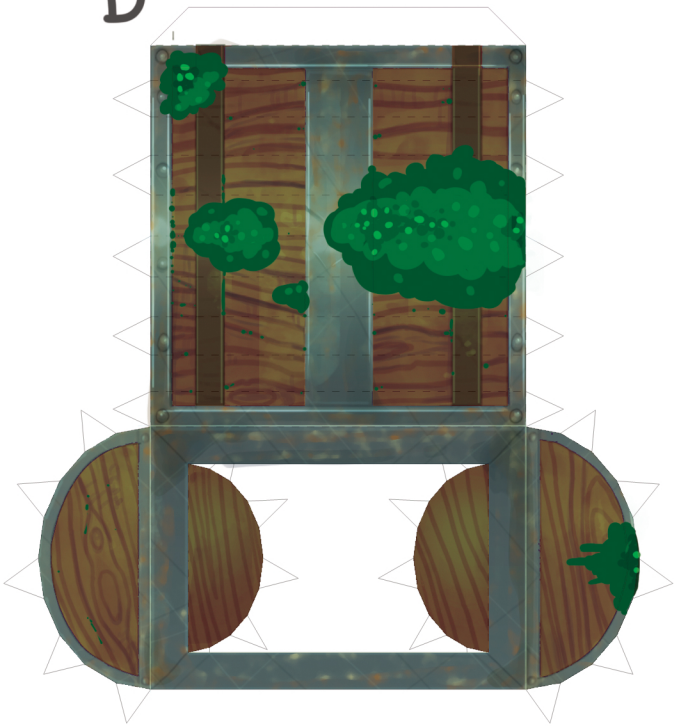

C

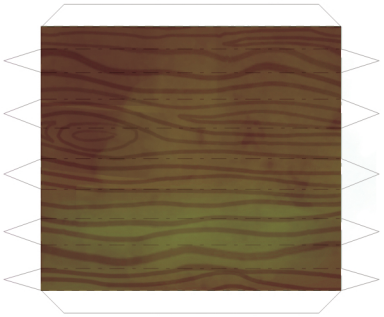

Fold and Paste



F E

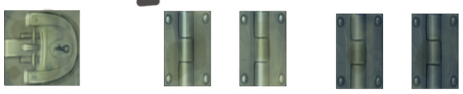

A

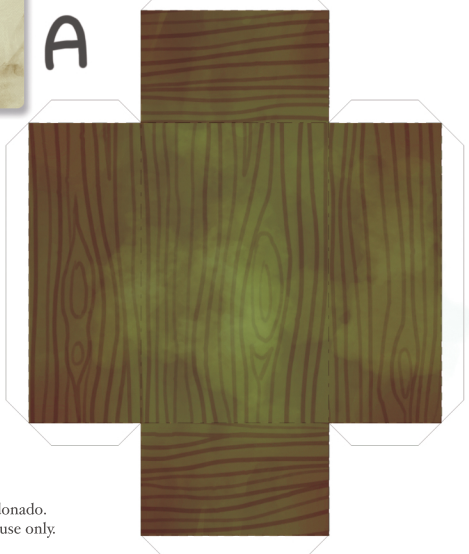

B

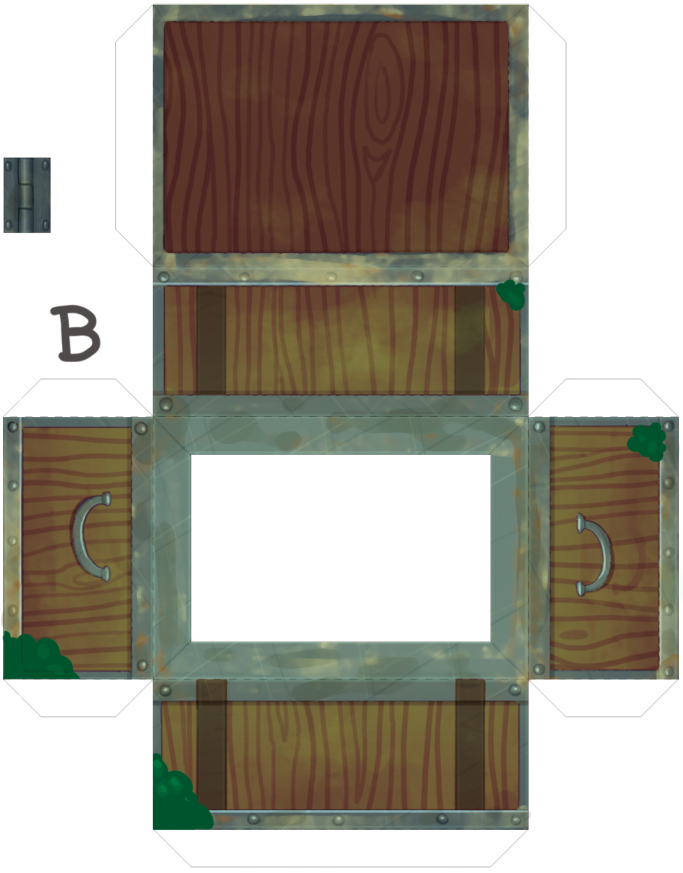

Item Card

Created by
Patricia Maldonado.
For Personal use only.

#05 Item: Chest

PAPER D&D
patreon.com/paperDnD

Instructions:

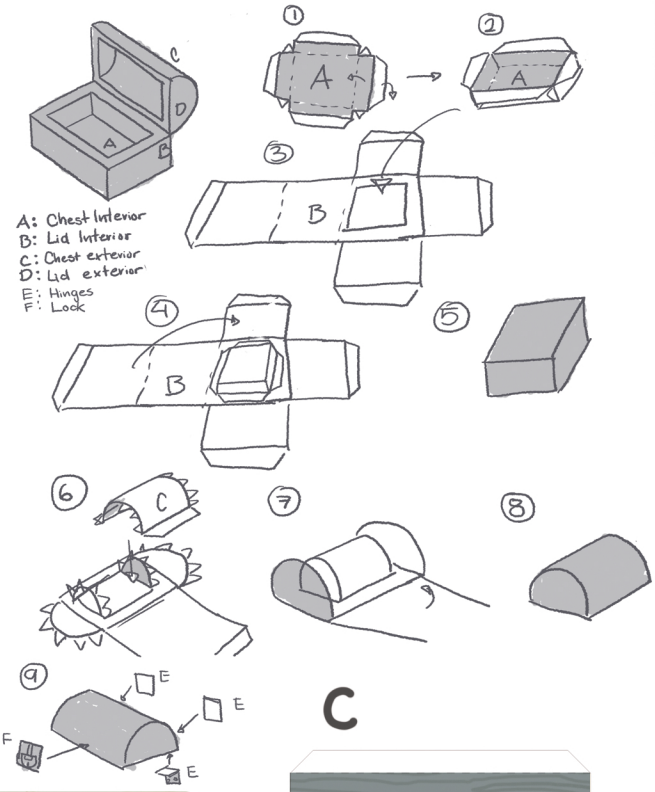

D

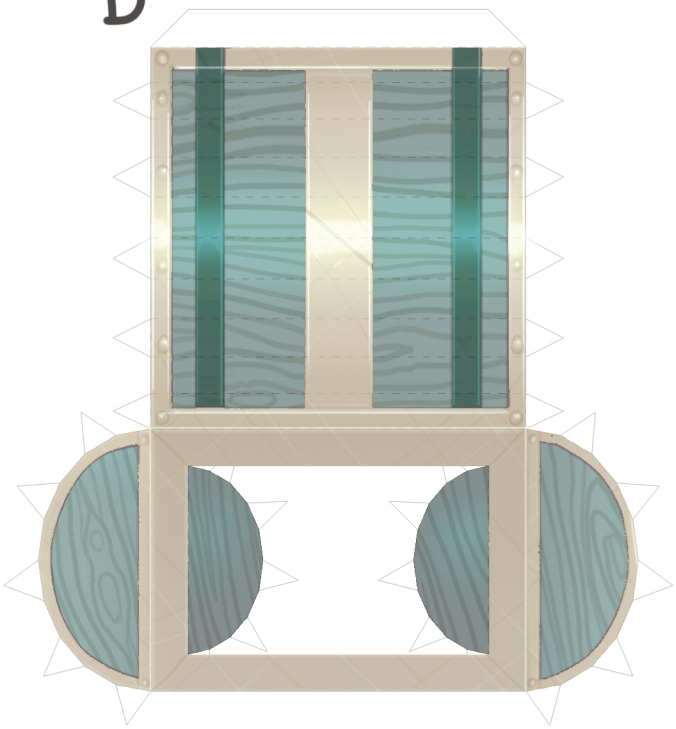

C

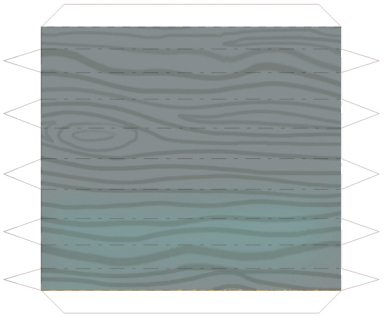

F E





Item Card

A

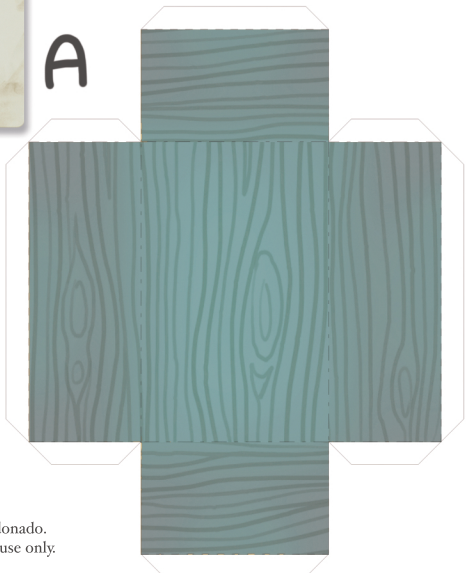

B

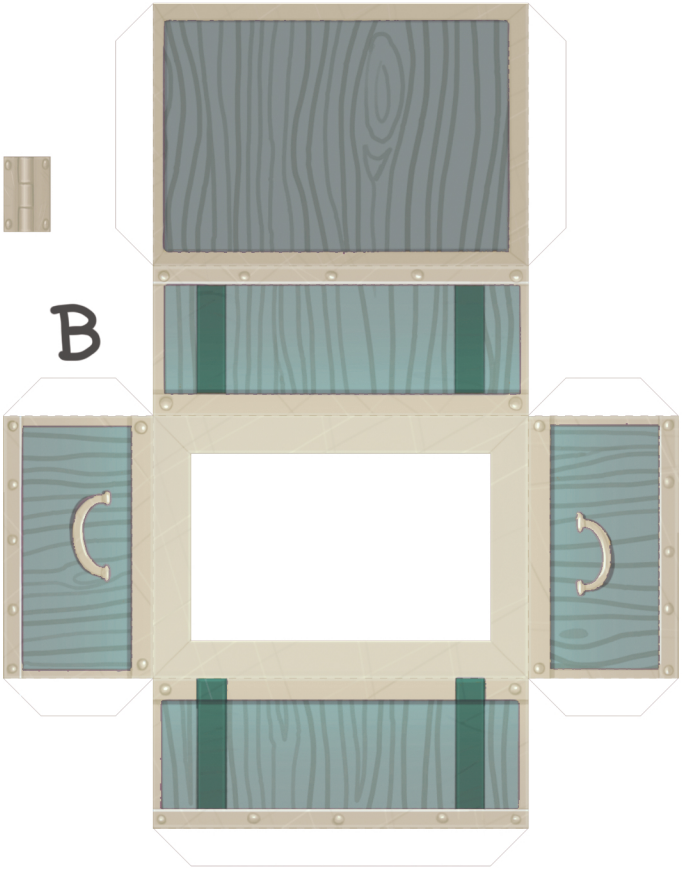



Created by
Patricia Maldonado.
For Personal use only.

#05 Item: Chest

PAPER D&D
patreon.com/paperDnD

Instructions:

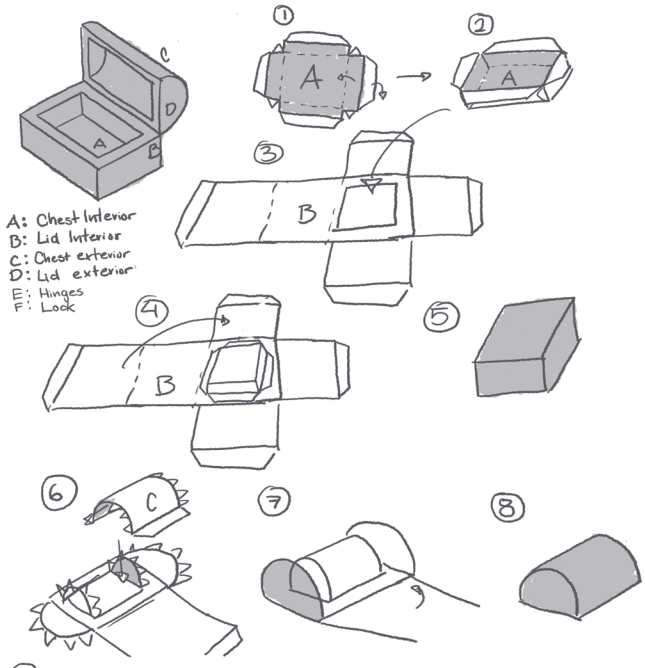

D

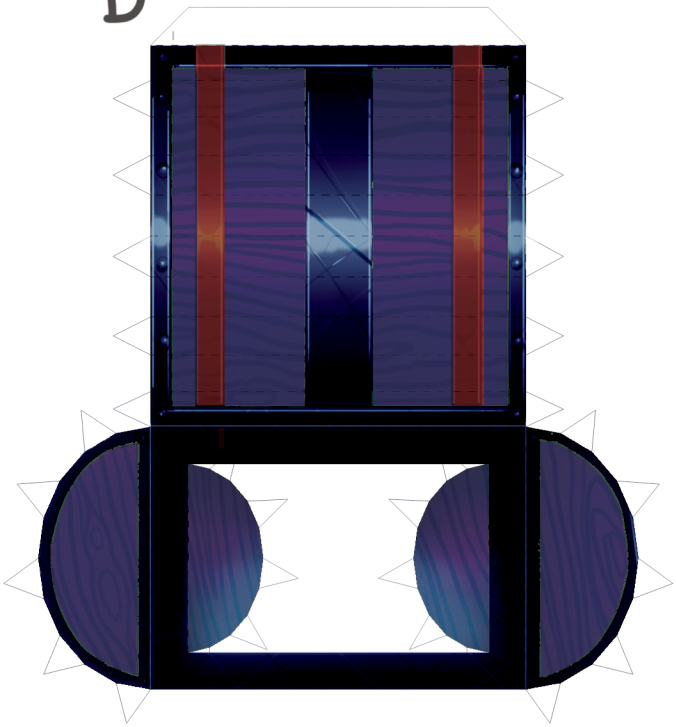

C

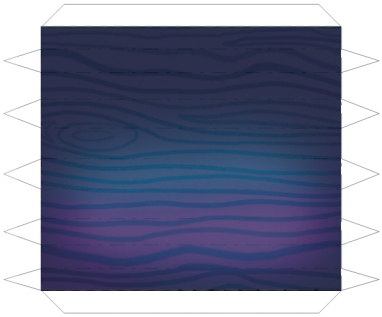

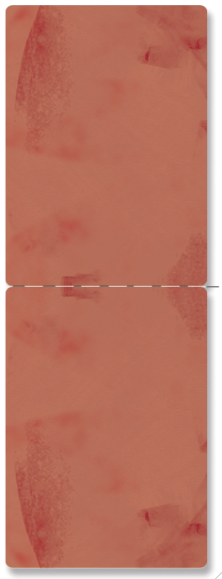

Fold and Paste

F



E



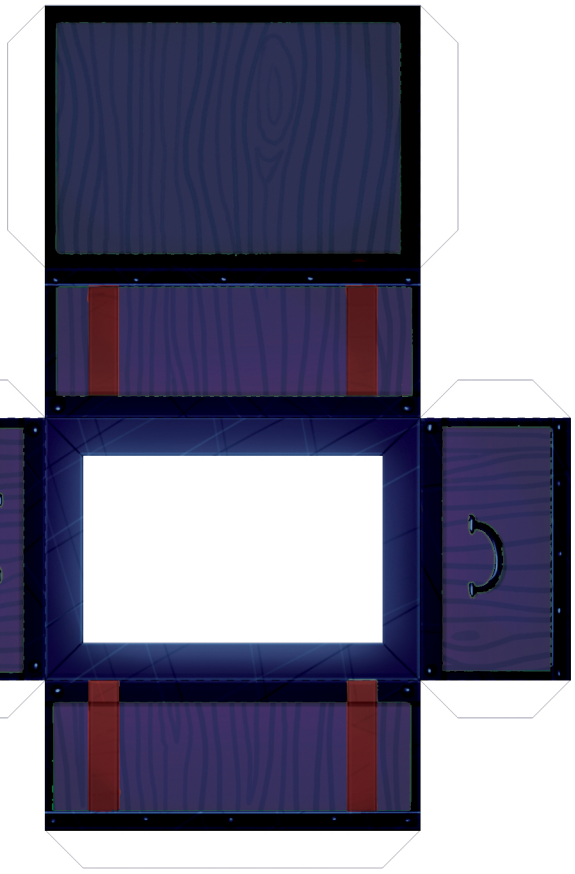

A

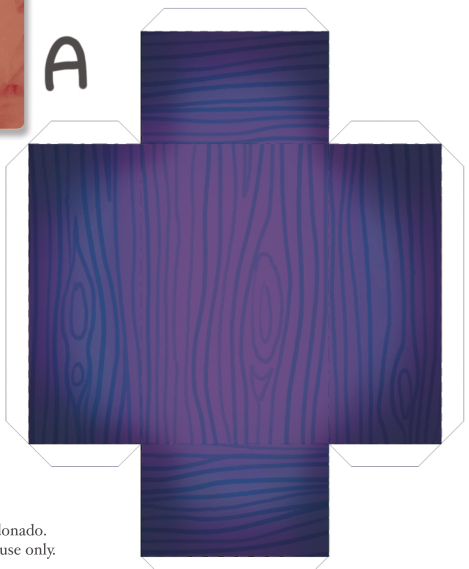

B

Item Card

Created by
Patricia Maldonado.
For Personal use only.